S 2332 ∅32 mm, Graphite Brushes, 15 Watt, CE approved

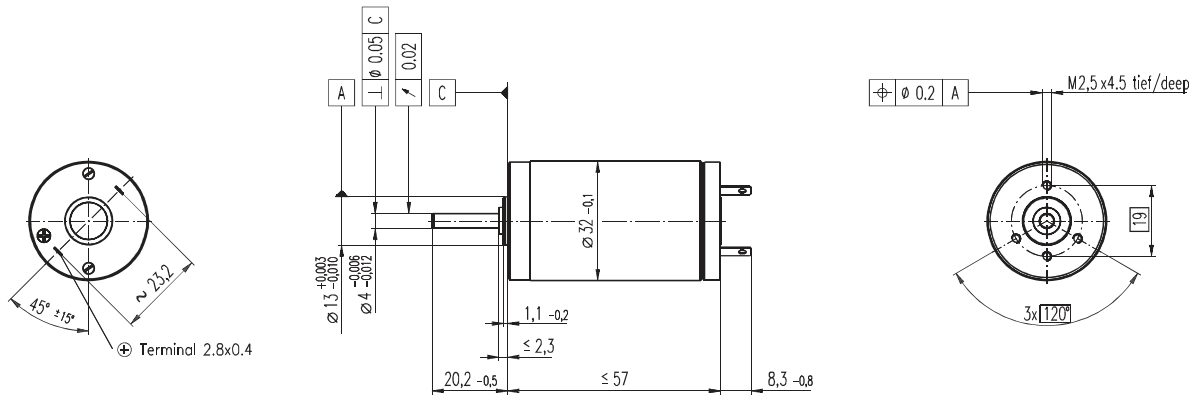

M 1:2

Stock program
Standard program
Special program (on request)

Article Numbers

2332. ... -12.216-200 (Insert winding number)

	Winding number	960	963	964	965	966	967	968	969	970	971	972	973
Motor Data													
Values at nominal voltage													
1 Nominal voltage	V	6	9	12	12	12	18	24	30	36	42	48	48
2 No load speed	rpm	5810	5310	6650	5870	4880	5380	5750	6000	5710	5270	4860	3950
3 No load current	mA	110	63.9	65.0	54.6	42.4	32.1	26.3	22.3	17.3	13.3	10.4	7.96
4 Nominal speed	rpm	4560	3780	5040	4230	3250	3880	4280	4530	4250	3790	3370	2440
5 Nominal torque (max. continuous torque)	mNm	13.2	22.7	24.3	25.9	26.5	28.6	29.1	28.9	29.3	29.2	29.3	29.4
6 Nominal current (max. continuous current)	A	1.50	1.50	1.50	1.40	1.19	0.939	0.763	0.633	0.508	0.399	0.323	0.263
7 Stall torque	mNm	89.1	91.1	116	104	85.6	109	119	122	118	106	97.1	78.2
8 Starting current	A	9.45	5.79	6.87	5.42	3.72	3.46	3.02	2.59	1.97	1.41	1.04	0.682
9 Max. efficiency	%	73	77	79	79	78	81	82	82	82	81	81	80
Characteristics													
10 Terminal resistance	Ω	0.635	1.56	1.75	2.21	3.22	5.21	7.94	11.6	18.2	29.8	46.1	70.3
11 Terminal inductance	mH	0.0883	0.246	0.283	0.363	0.526	0.985	1.54	2.22	3.53	5.64	8.65	13.1
12 Torque constant	mNm/A	9.43	15.7	16.9	19.1	23.0	31.5	39.3	47.2	59.6	75.3	93.3	115
13 Speed constant	rpm/V	1010	607	566	500	415	303	243	202	160	127	102	83.3
14 Speed/torque gradient	rpm/mNm	68.3	60.0	58.7	57.9	58.2	50.2	49.0	49.6	49.1	50.3	50.6	51.1
15 Mechanical time constant	ms	23.6	17.2	16.4	16.0	15.5	14.6	14.3	14.1	14.0	13.9	13.8	13.8
16 Rotor inertia	gcm²	33.0	27.4	26.7	26.4	25.5	27.9	27.8	27.2	27.1	26.4	26.1	25.9

Specifications

Thermal data		
17	Thermal resistance housing-ambient	12.5 K/W
18	Thermal resistance winding-housing	1.9 K/W
19	Thermal time constant winding	10.9 s
20	Thermal time constant motor	1030 s
21	Ambient temperature	-20…+100°C
22	Max. permissible winding temperature	+125°C
Mechanical data (ball bearings)		
23	Max. permissible speed	9200 rpm
24	Axial play	0.05 - 0.15 mm
25	Radial play	0.025 mm
26	Max. axial load (dynamic)	5.6 N
27	Max. force for press fits (static)	113 N
28	Max. radial loading, 5 mm from flange	28 N
Other specifications		
29	Number of pole pairs	1
30	Number of commutator segments	13
31	Weight of motor	230 g

Values listed in the table are nominal.
Explanation of the figures on page 49.

Option
Sleeve bearings in place of ball bearings
Pigtails in place of terminals

Operating Range

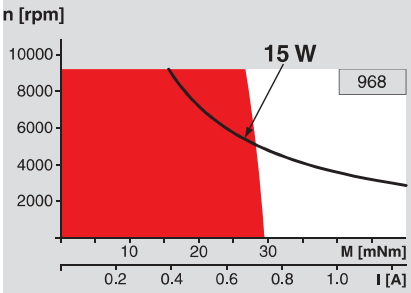

Comments

Continuous operation
In observation of above listed thermal resistance (lines 17 and 18) the maximum permissible winding temperature will be reached during continuous operation at 25°C ambient.
= Thermal limit.

Short term operation
The motor may be briefly overloaded (recurring).

Assigned power rating

maxon Modular System

Overview on page 16 - 21
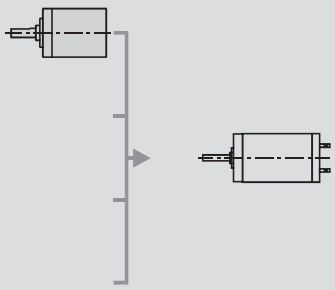
Planetary Gearhead
∅32 mm
0.75 - 4.5 Nm
Page 235